Hillmar
Hillmar Industries Ltd.
7371 Vantage Way
Delta, BC V4G 1C9
P:604 946-7115 F:604 946-0329
info@hillmar.com www.hillmar.com

HYD PWR UNIT 20-SMS4EN
HPT20-SMS4EN-MB1V3-150PR5
SPECIFICATION SHEET
SLS & MKTG
ENGLISH

Sheet Number:	
Job Number:	
Form Number:	129-523-73175PT

Company / Project Reference:	Date.:	Page.:	Document Package No.:	Rev.:
		1 OF 1		

Inventor Drawing

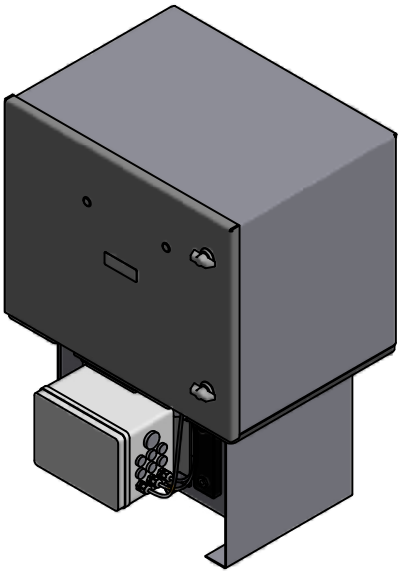

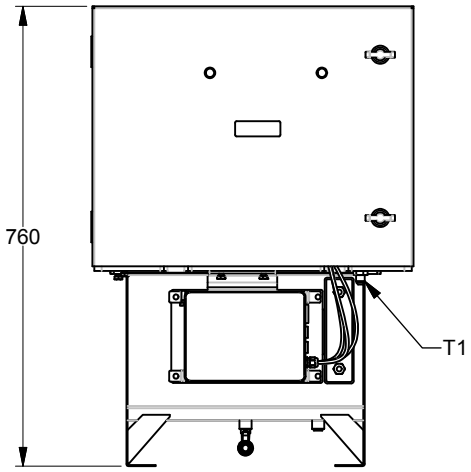

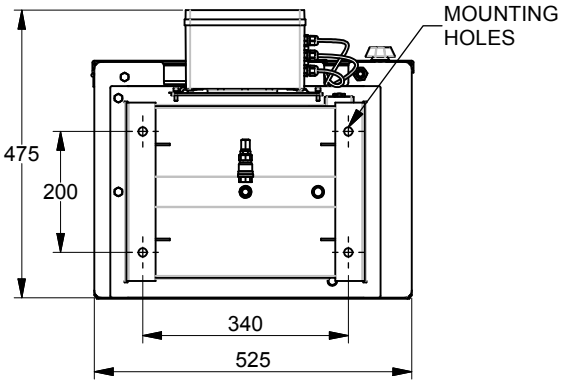

FEATURE	CODE
Hydraulic power unit	HPT
Oil volume	20
Reservoir SS304 steel mill	SM
Enclosure SS304	S4EN
Manifold	MB1V3
Motor - pump	150PR5

Example for ordering
HPT20-SMS4EN-MB1V3-150PR5

TECHNICAL DATA

Motor size (kW)	1.5
Oil volume (L)	20
Maximum pressure (MPa)	20
Hydraulic fittings (oil supply) T1	-6 x 37° JIC
Mounting holes	4 x Ø14
Mounting bolts	4 x M12
Weight w/o oil (kg)	100

NOMINAL SPECIFICATION

Stainless steel reservoir and enclosure.

Gear pump and high-pressure outlet filter.

Circuit manifold having check-valve, relief valve, normally open solenoid valve with manual override, pressure gauge with isolation valve, flow control, motor cut-out pressure switch, accumulator with flow control valve.

Control voltage electrical junction box connection to be drilled to suit requirements by customer.

For electrical motor junction box connection see motor specification sheet for details.

NOTES

Hillmar power units can be customized to suit customer's special requirements

All figures are nominal figures only

All dimensions are in millimeters

Document Template #710-101-62058

** ALL TECHNICAL DATA IS SUBJECT TO CHANGE WITHOUT NOTICE **
Hillmar works have a fully registered ISO 9001-2008 quality assurance programme (QCB #01-1525)

C:\TEMP\fc4f7c86-3d26-49bf-b426-e0859571530\5\8000051935 1\HILLMAR\HILLMAR PRODUCTION\01 HYD PWR UNIT\0700-1\07001004 HPT-SM\SPC-SHT-HPT-SM\129-523-73175 HPT20-SMS4EN-MB1V3-150PR5.idw